Darkly Labs®

EMBLASER 2

Machine Rev. 2.0

User Manual

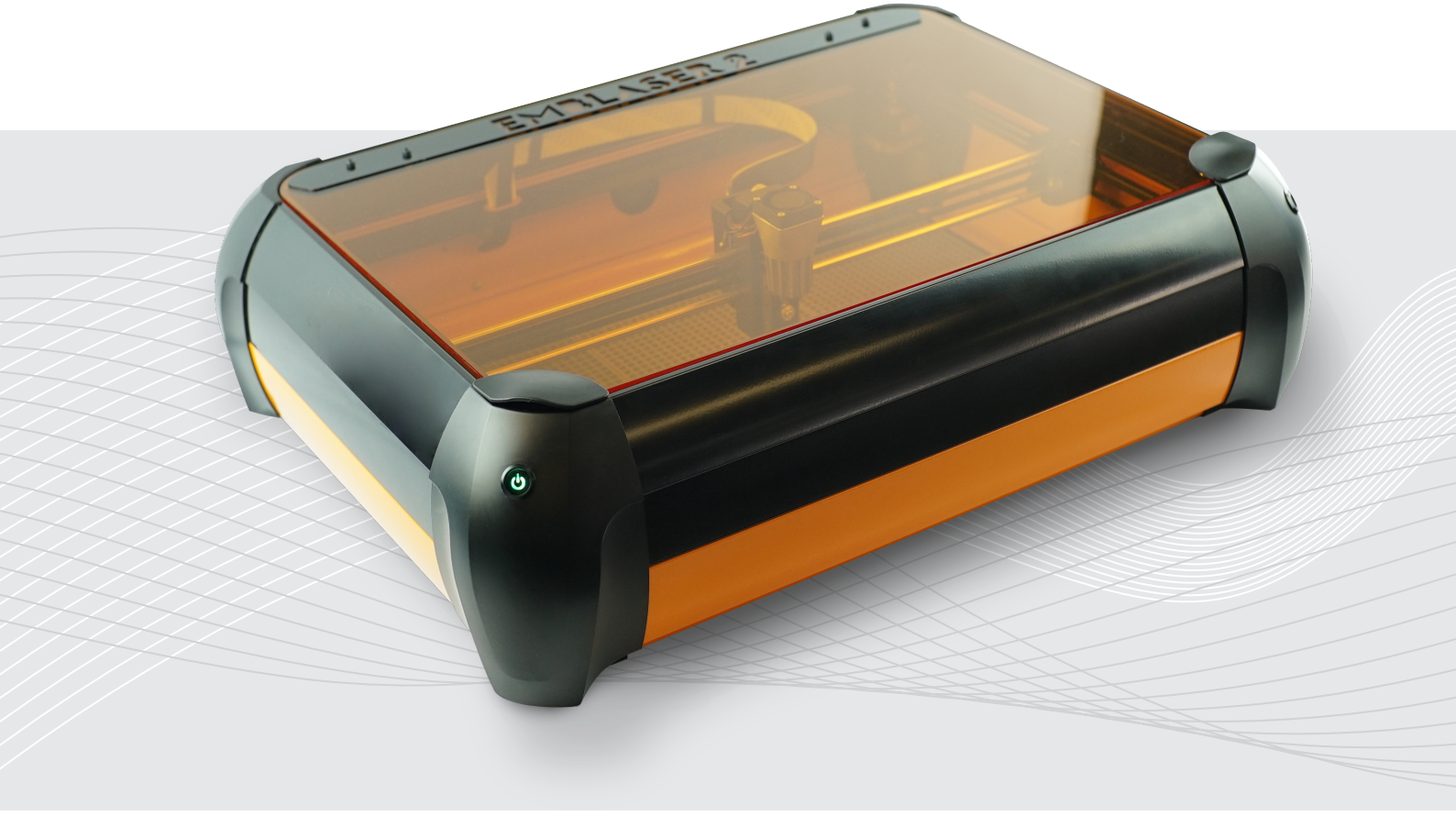

English

IMPORTANT

BANNED MATERIALS

PVC, VINYL, ABS,
FIBERGLASS, COATED CARBON FIBER,
ANY MATERIAL CONTAINING CHLORINE

Using these materials within your machine will produce extremely toxic fumes, leading to severe health issues and machine damage.

If you do not know what your material contains, DO NOT USE IT.

CONTENTS

1. **For Your Safety**
   - Warnings 6

2. **Notices**
   - Notices for Customers in Canada 7
   - Notices for Customers in Europe 7
   - Notices for Customers in the USA 8
   - FDA Classification Information 8
   - FDA Label Identification 9

3. **Getting Started**
   - What's in the box 11
   - Unpacking your Emblaser 2 12
   - Your Creative Space 13
   - Installing Cutting Mats 14
   - Plugging In 14
   - Installing the Software 15
   - Aperture Nozzle Alignment 16
   - Calibrating the Optics 17
   - Ready to Go! 17

4. **About your Emblaser 2**
   - Getting to know your Emblaser 2 18
   - Workspace and External Dimensions 19
   - 'Enabling' the Laser 20
   - Laser Height Control 21
   - Using the Workspace Camera 22
   - Connecting via WiFi 23

5. Caring for your Emblaser 2

Maintenance Schedule 24
General Maintenance 25
Replacing the Diode Module 26
Updating the Controller Firmware 28
Updating the Wifi Firmware 28

6. Reference

Emblaser 2 Specifications 29
Material Property Table 30
Health Warning Information 32
Technical Support 33

1. FOR YOUR SAFETY

To prevent damage to your Emblaser 2 or injury to yourself or to others, read the following safety precautions carefully. Keep these safety instructions where all those who use the product will read them.

WARNINGS

Do not use in wet surroundings

Water and electricity are a dangerous combination. Ensure your workspace is dry and not subject to potential wet conditions.

Always use in well ventilated area

Never use your Emblaser 2 in an enclosed area which doesn't have good ventilation and flow of fresh air.

Ensure fumes are properly vented

Fumes produced by the Emblaser 2 must be vented safely through the exhaust hose provided. This may include venting outside through a window or via the optional Fume Filtration System.

Ensure your material is safe to use

Materials react differently to laser cutting or engraving depending on their chemical or physical composition. Some materials produce harmful fumes or are more susceptible to igniting. It is important to understand how your material will react BEFORE using in the Emblaser 2. A 'Material Reaction Table' has been provided in this manual.

Never use materials containing chlorine

Materials containing chlorine will produce extremely toxic and corrosive fumes when laser cut or engraved.

Never use reflective materials

Reflective materials, such as materials with mirror surfaces, will cause the laser to be reflected and potentially causing injury to the user or damage to your Emblaser 2.

Do not use in the presence of flammable gas

Do not use your Emblaser 2 in the presence of flammable gas, as this could result in an explosion or fire.

Ensure proper supervision of children, disabled and impaired users

The Emblaser 2 is not intended for children under the age of 15 years. Children under the age of 15 years should be supervised to ensure they do not play with the Emblaser 2. Teenagers aged between 15 and 18 years can use the Emblaser with the consent and/or assistance of their parents or persons who have parental authority over them. The Emblaser 2 is not intended to be used by persons (including children) with reduced physical, sensory or mental capabilities, unless they have been given supervision or instruction concerning use of the Emblaser 2 by a person responsible for their safety.

Do not operate the Emblaser 2 if damaged

Damage to any part of the Emblaser 2 could compromise its safety and cause injury. If any part of the Emblaser 2 is damaged, contact your reseller or Darkly Labs directly before operation.

Never run your Emblaser 2 unattended

Do not leave unattended while running . If you see flame or fire - Immediately stop the machine and extinguish. Not only could a flame grow into a larger fire, its heat will cause damage to the internal mechanisms and optics.

2. NOTICES

- No part of this publication may be reproduced, stored in a retrieval system, or transmitted, in any form or by any means, electronic, mechanical, photocopying or otherwise, without the prior written permission of Darkly Labs.

- Darkly Digital Pty Ltd (Darkly Labs) reserves the right to change the specifications of the hardware and software described in these manuals at any time and without prior notice.

- While every effort has been made to ensure that the information in this manuals is accurate and complete, we would appreciate it were you to bring any errors or omissions to the attention of the Darkly Labs (info@darklylabs.com)

CAUTION: Use of controls or adjustments or performance of procedures other than those specified herein may result in hazardous radiation exposure.

Use only Darkly Labs Brand Accessories
Only Darkly Labs brand accessories certified by Darkly Labs specifically for use with your Emblaser 2 are engineered and proven to operate within its operational and safety requirements. The use of non-Darkly Labs accessories could damage your Emblaser 2 and void your warranty.

Notices for Customers in Canada
CAUTION
This Class B digital apparatus complies with Canadian ICES-003.
ATTENTION
Cet appareil num.rique de la classe B est conforme . la norme NMB-003 du Canada.

Notices for Customers in Europe
This symbol indicates that this product is to be collected separately.

The following apply only to users in European countries:
This product is designated for separate collection at an appropriate collection point. Do not dispose of as household waste.
For more information, contact the retailer or the local authorities in charge of waste management.

Notices for Customers in the U.S.A.

Power Cable

At voltages over AC 125 V (U.S.A. only): The power cable must be rated for the voltage in use, be at least AWG no. 18 gauge, and have SVG insulation or better with a NEMA 6P-15 plug rated for AC 250 V 15 A.

Federal Communications Commission (FCC) Radio Frequency Interference Statement

This equipment has been tested and found to comply with the limits for a Class B digital device, pursuant to Part 15 of the FCC rules. These limits are designed to provide reasonable protection against harmful interference in a residential installation. This equipment generates, uses, and can radiate radio frequency energy and, if not installed and used in accordance with the instructions, may cause harmful interference to radio communications.
However, there is no guarantee that interference will not occur in a particular installation.
If this equipment does cause harmful interference to radio or television reception, which can be determined by turning the equipment off and on, the user is encouraged to try to correct the interference by one or more of the following measures:

Reorient or relocate the receiving antenna.
Increase the separation between the equipment and receiver.
Connect the equipment into an outlet on a circuit different from that to which the receiver is connected.
Consult the dealer or an experienced radio/television technician for help.

CAUTIONS

Modifications

The FCC requires the user be notified that any changes or modifications made to this device that are not expressly approved by Darkly Labs may void the user's authority to operate the equipment.

Interface Cables

Use the interface cables sold or provided by Darkly Labs for your equipment. Using other interface cables may exceed the limits of Class B Part 15 of the FCC rules.

Notice for Customers in the State of California

WARNING: Handling the cord on this product may expose you to lead, a chemical known to the State of California to cause birth defects or other reproductive harm. Wash hands after handling.

FDA Classification Information

Machine Laser Class:	Class I
Laser Diode:	Class IV
Wavelength:	445-455nM
Max. Average radiant power	5 watts

FDA Label Identification

The International Electrotechnical Commission laser safety standard IEC 60825-1:2007 mandates warning labels that provide information on the wavelength and power of emitted laser radiation, and which show the aperture where the laser is emitted. Figure 1 shows examples of these labels and their location on the Emblaser 2.

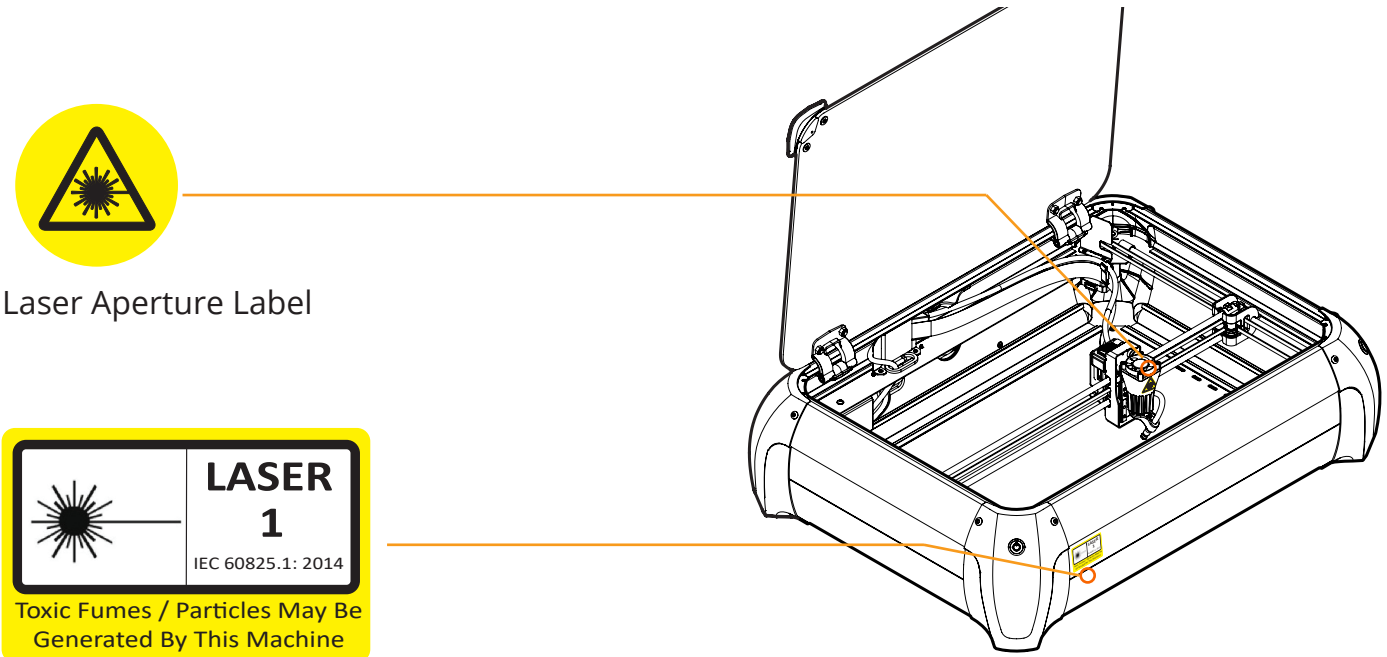

Laser Aperture Label

Front Information Label

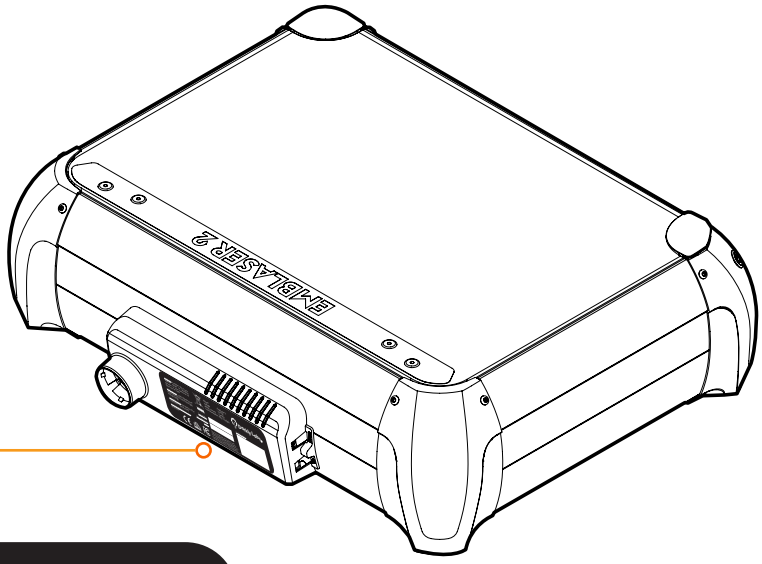

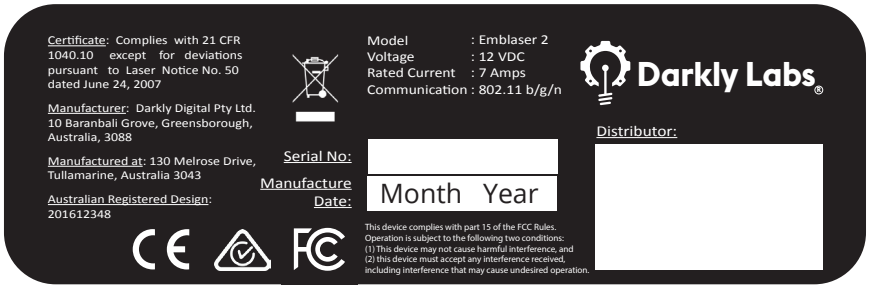

Rear Information Label

Figure 1: Warning advisory and US FDA compliance labels and their locations.

3. GETTING STARTED

What's in the box

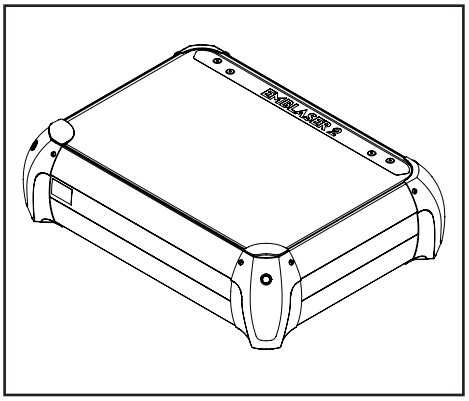

Emblaser 2
Fully assembled Emblaser 2.

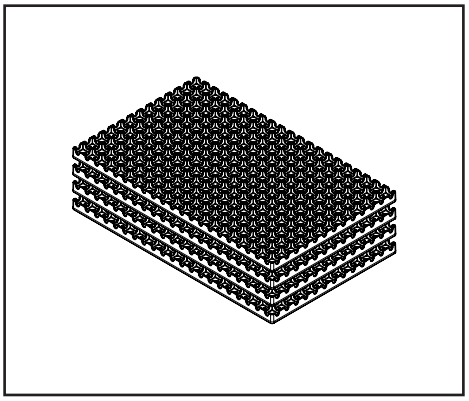

Cutting Mats
Four (4) cutting mats.

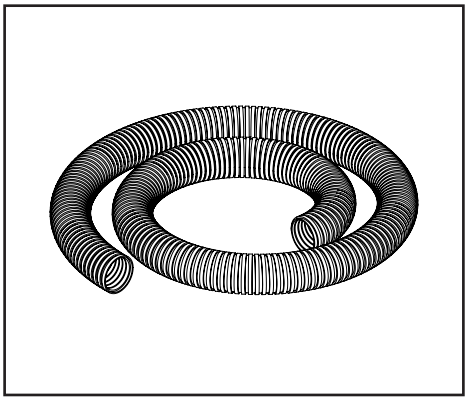

Exhaust Tube
Tube for venting fumes.

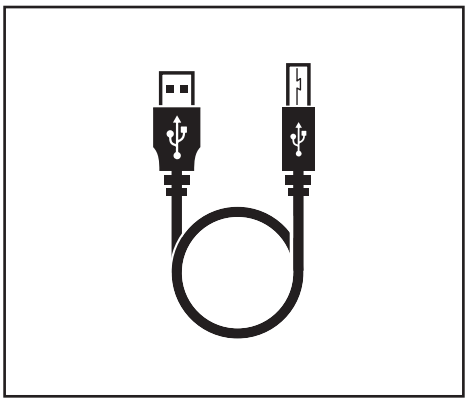

USB Cable
USB cable for connecting the Emblaser 2 to a computer.

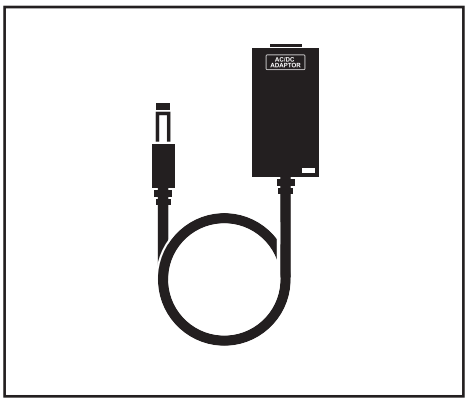

Power Adaptor
110-240v power adaptor.

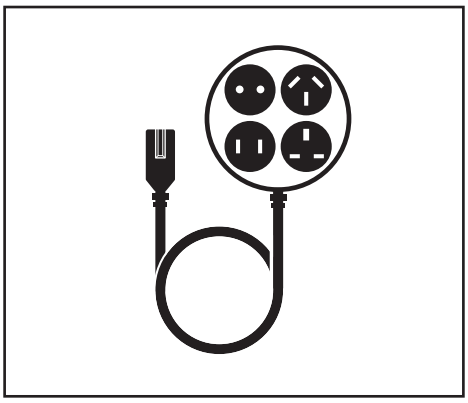

Power Lead
Country specific power lead.

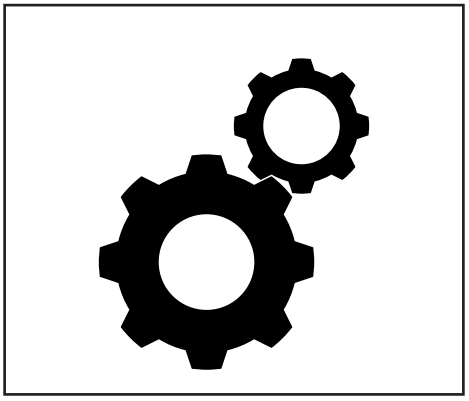

Tool / Cleaning Kit
Various tools and cleaning supplies.

Unpacking your Emblaser 2

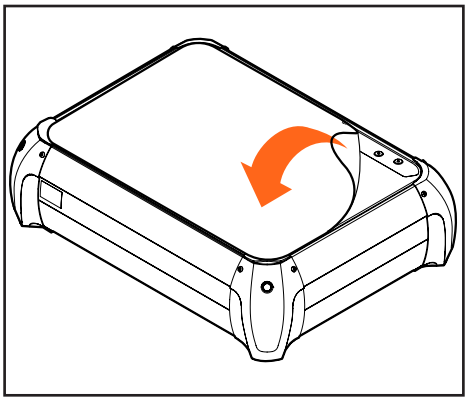

1: Peel off protective lid covering

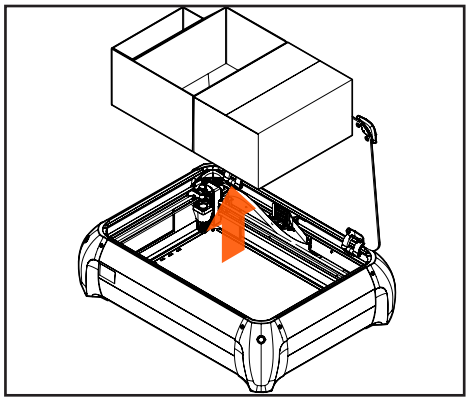

2: Remove internal spacer and accessory box.

Keep all your packaging materials in case you need to return your Emblaser 2 for repair.

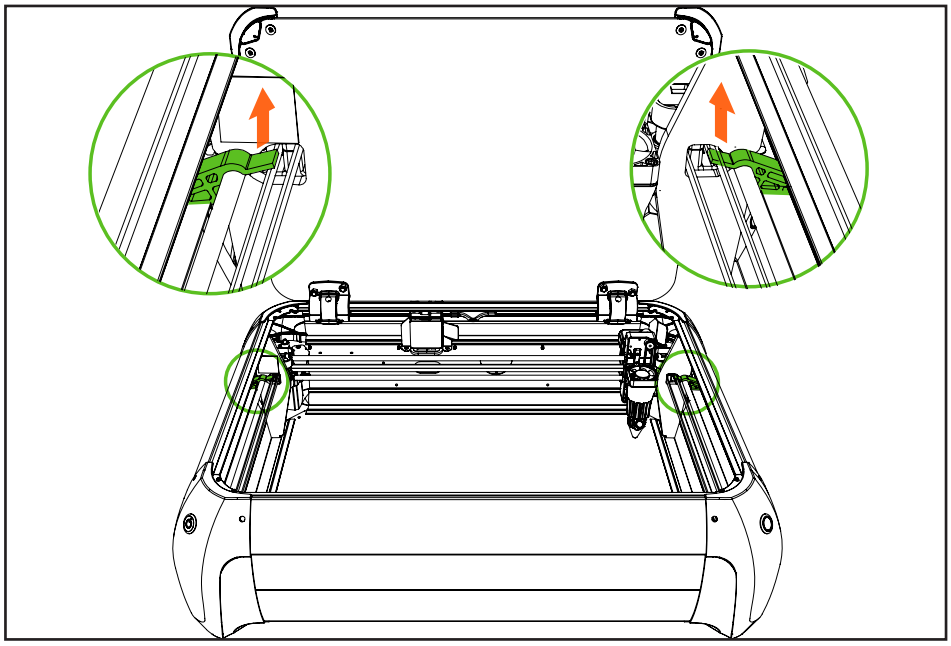

3: Remove horizontal rail packaging supports.

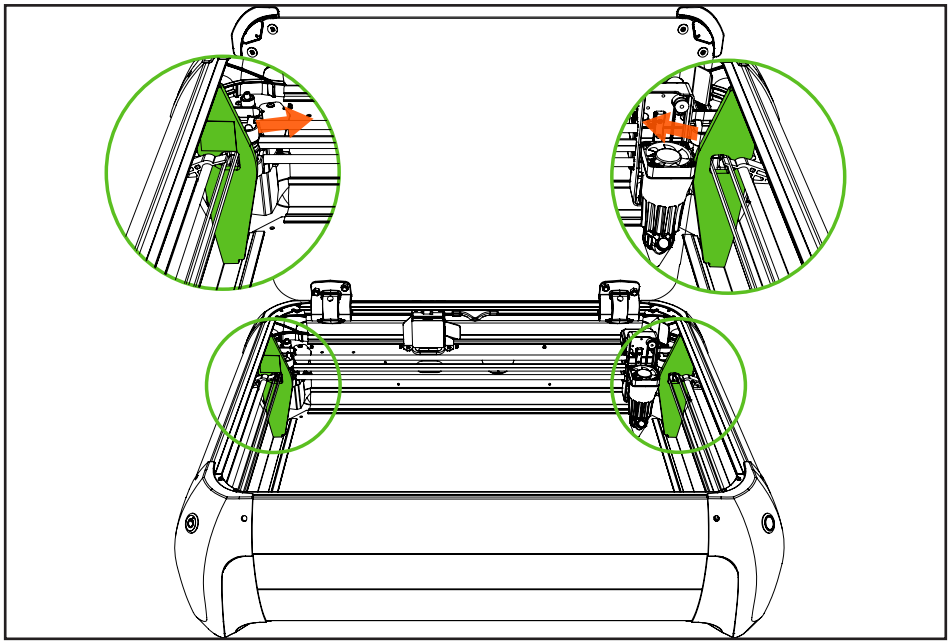

4: Remove vertical rail packaging supports.

Your Creative Space

Creating a safe workspace for your Emblaser 2 is very important. We recommend reviewing the following diagram to ensure your chosen location for the Emblaser 2 is safe.

EXHAUST VENTING
Vent exhaust safely out of creative space.

SMOKE/CO2 DETECTOR
These devices provide critical early warning for dangerous situations.

FIRE BLANKET/ EXTINGUISHER
In the unlikely event of a fire incident be prepared with the necessary equipment.

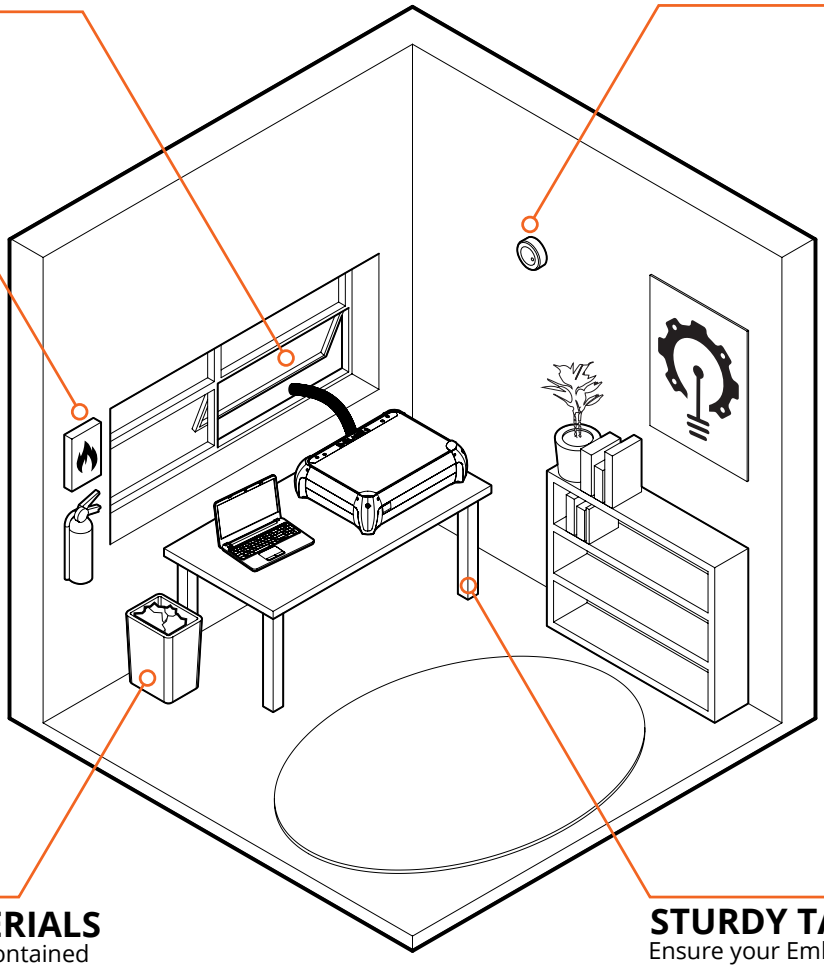

FLAMABLE MATERIALS
Keep flamable materials contained and clear of the Emblaser 2.

STURDY TABLE
Ensure your Emblaser 2 is placed on a sturdy table. Keep it away from the edge.

Installing Cutting Mats

The cutting mats supplied with your Emblaser 2 are designed protect your Emblaser 2 baseplate from scorching. The mats are made of a material resistant to damage from the laser.

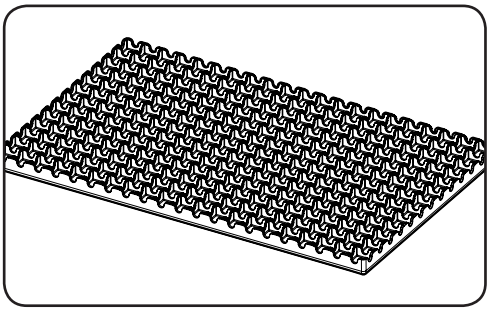

1. Top Side

This is the top surface which faces upwards. Your material is placed on this surface.

The cutting mats are 10mm tall.

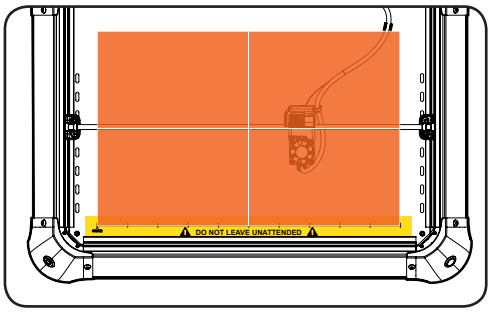

2. Cutting Mat Placement

On the base-plate of your Emblaser 2 is a label illustrating the bottom edge of the workspace.

Align the first cutting mat with ‘Origin’ and arrange the others as shown.

Plugging in

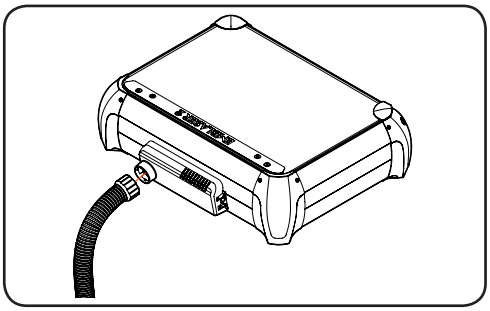

1. Attach Exhaust Hose

Attach the end of the exhaust hose to the rear connector on your Emblaser 2. Ensure the free end of the hose is placed to allow venting of fumes safely out of your creative space.

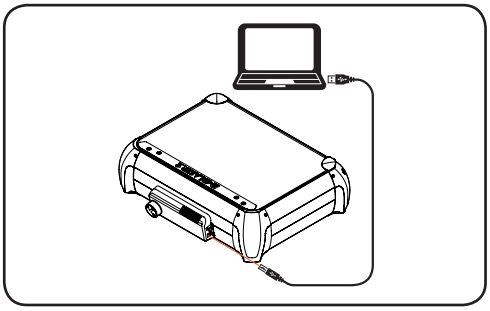

2. Plug in USB Cable

Plug the supplied USB cable into the USB connector on the rear of the Emblaser 2. Connect this to a USB port on your computer.

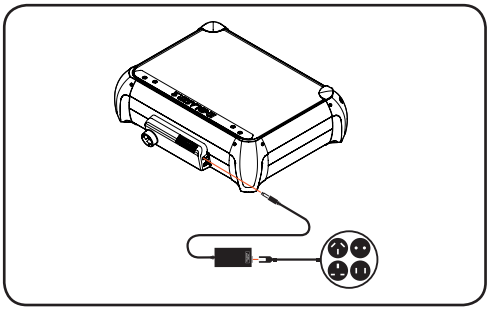

3. Connect the power

Plug the supplied power adapter into the power socket on the rear of the Emblaser 2. Using the supplied power cable, plug the adapter into a 110-240V AC outlet.

Installing the Software

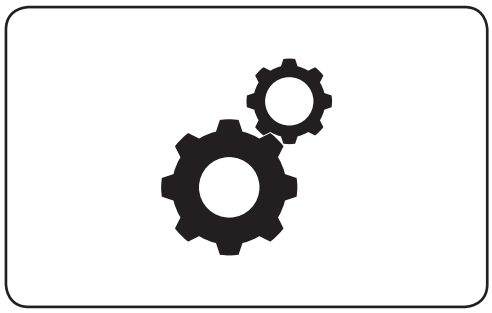

1. Install the software drivers

WINDOWS 10 & MAC OSX USERS CAN SKIP THIS STEP

For other operating systems, check the Help Centre at the following link for step-by-step instructions:

http://darklylabs.com/e2

2. Install LightBurn

LightBurn is the software used for controlling your machine. The latest version can be downloaded from the 'Getting Started' section of our 'Help Centre'.

http://darklylabs.com/e2

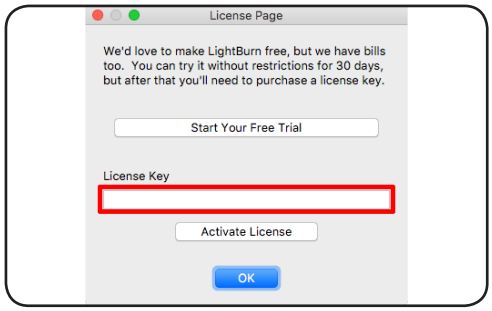

3. Enter your license key

When you first start Lightburn you will be presented the license window.

Enter the license key supplied on the information card included with your machine.

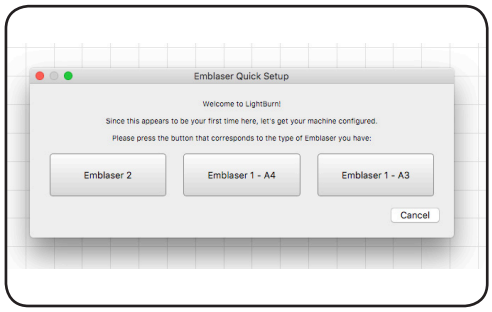

4. Setup

You will be presented with the 'Emblaser Quick Setup' window.

Click the 'Emblaser 2' button.

LightBurn is now installed and ready.
It will automatically detect and connect to your Emblaser 2 when running.

Aperture Nozzle Alignment

The silicone aperture nozzle helps keep your lens clean from debris along with providing the air-flow from the air-assist system.

The nozzle may become dislodged during shipping and block the laser from exiting correctly. If you are finding your machine not performing correctly, this would be the first part to check.

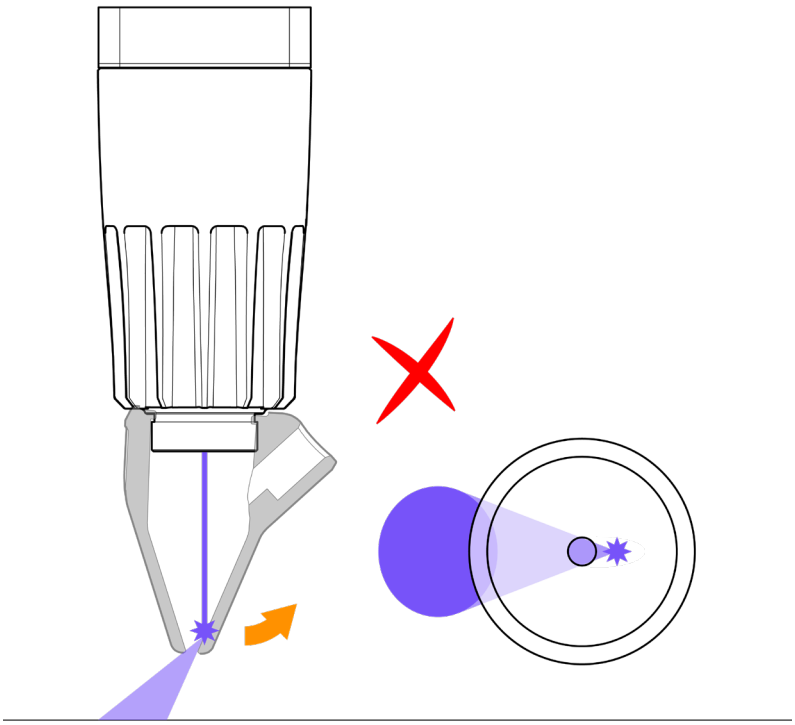

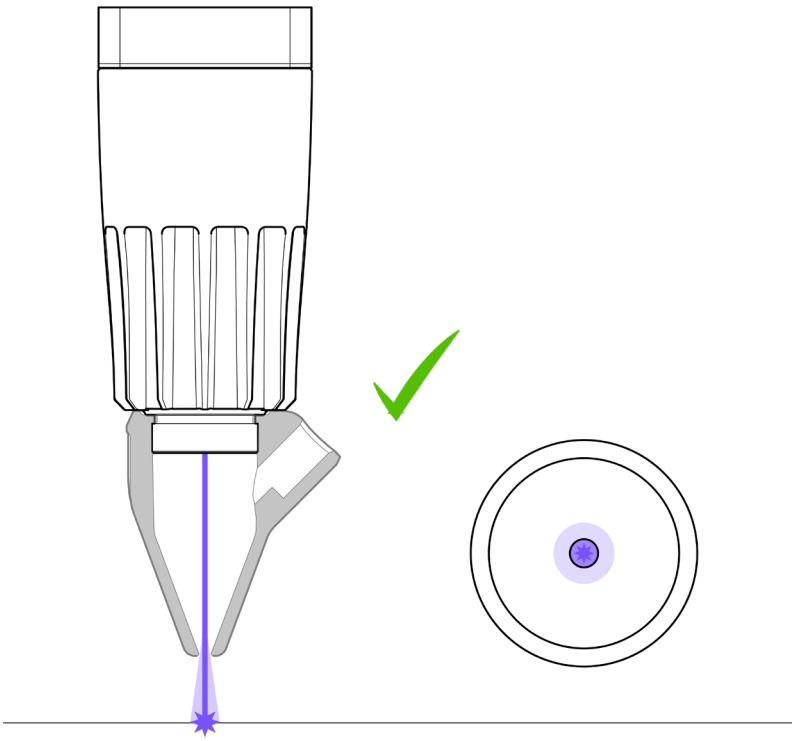

Calibrating the optics

Focus calibration is the process to determine your machine's optimal focus setting. An accurately calibrated optical system can assist with achieving finer detail and cutting through tougher materials.

Emblaser2 (Rev.2) machines are calibrated during assembly, but it is recommended to go through the focus calibration process when you first receive your machine, in case the value has changed during shipping.

1. Start LightBurn

With your Emblaser 2 turned on, start Lightburn.

Lightburn will automatically detect your Emblaser 2 and display the 'Ready' message in the Laser Menu.

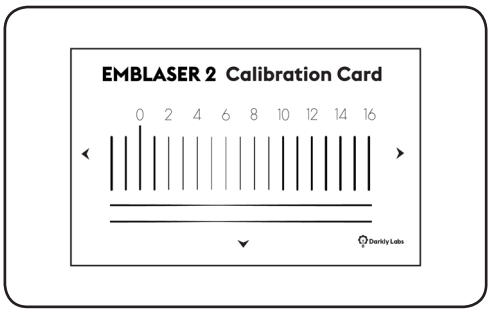

2. Run the Calibration wizard

From the top menu in LightBurn select:
Emblaser2 / Start Focus Calibration

Then follow the on-screen instructions.

Ready to go!

Your Emblaser 2 is now ready to start using.

We recommend you have a read through Chapters 4 & 5 to learn more about your Emblaser 2 and how to care for it.

When you are ready, jump over to our Online Help Centre and work through the tutorials we have created. They will help you become familiar with the software and Emblaser 2 functionality.

darklylabs.com/learn

4. ABOUT YOUR EMBLASER 2

Getting to know your Emblaser 2

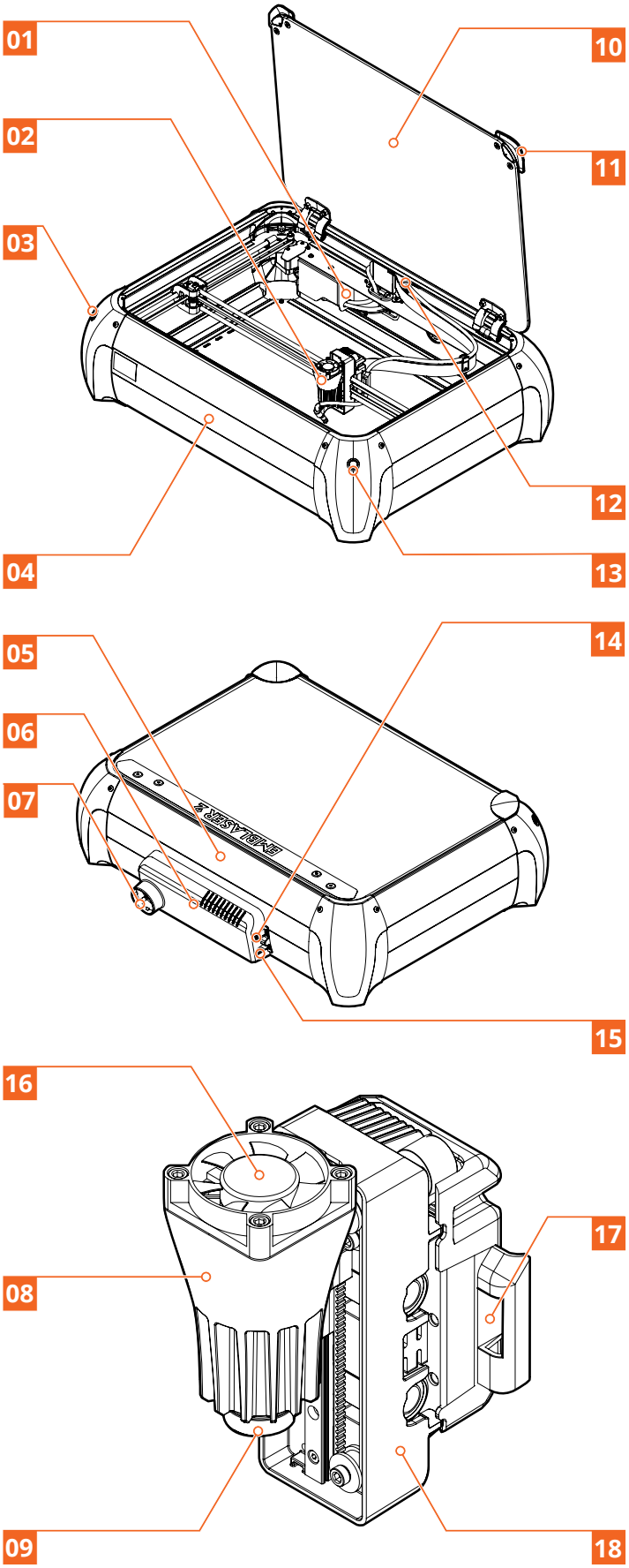

01	Air-Assist Accessory (optional)
02	Laser Unit Assembly
03	On/Off Power Button
04	Front Side
05	Rear Side
06	Electronics Pod
07	Exhaust Hose Connector
08	Laser Heat-sink
09	Laser Lens Aperture
10	Lid
11	Lid Handles
12	Workspace Camera
13	Laser 'Enable' Button
14	Power Plug
15	USB Plug
16	Laser Cooling Fan
17	Air-Assist Hose Support
18	Laser Carriage

Workspace and External Dimensions

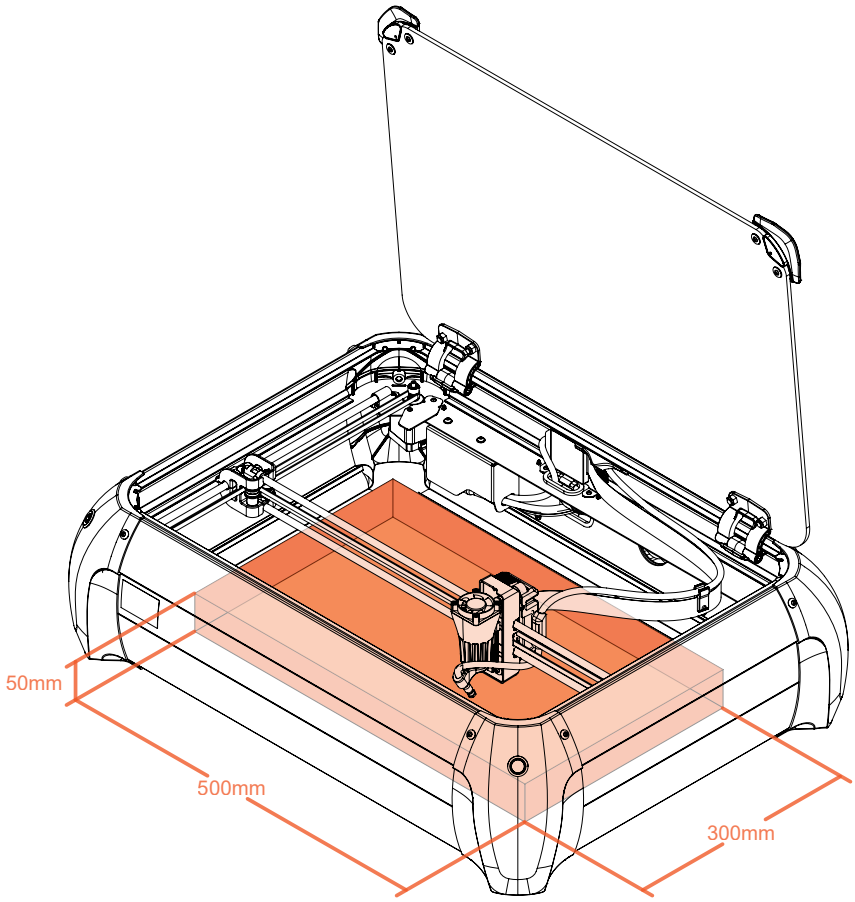

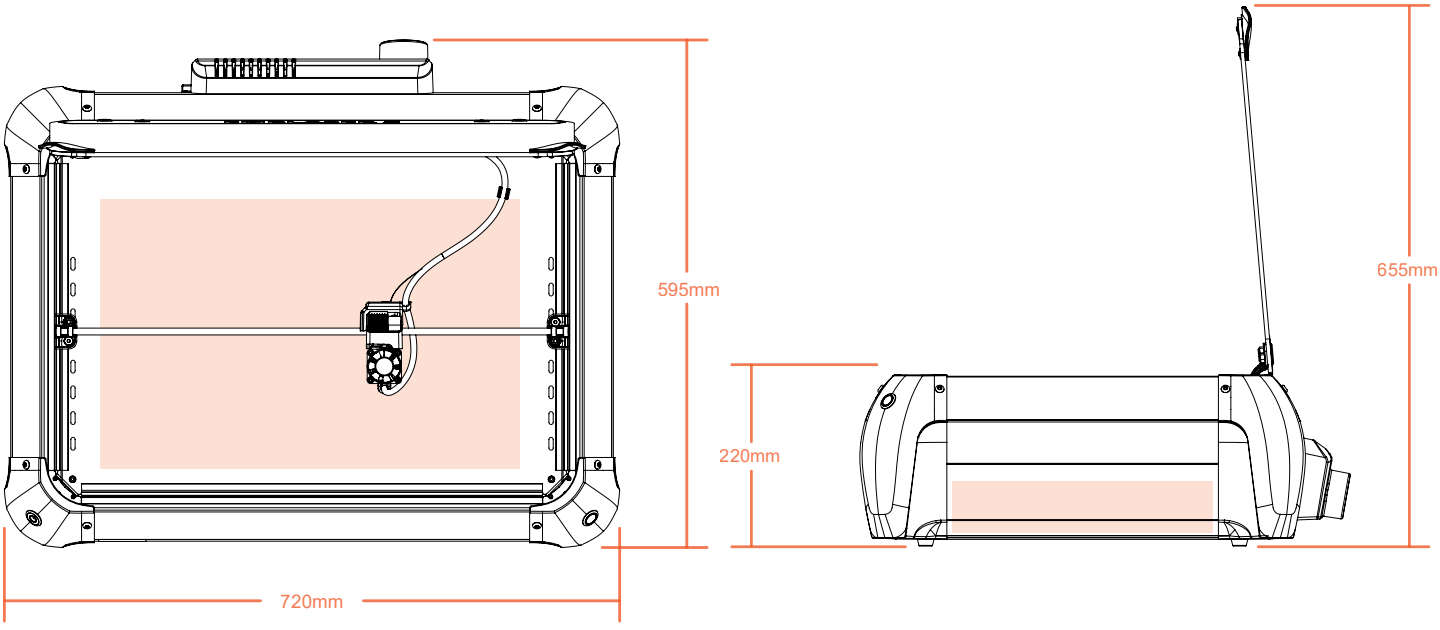

‘Enabling’ the Laser

Before your Emblaser 2 will allow the laser to emit laser light, it must be manually ‘enabled’. This is achieved by pressing the ‘Enable’ button on the front right corner of the Emblaser 2 when the lid is closed.
The ‘Enable’ button will light up ‘red’ when successfully enabled.

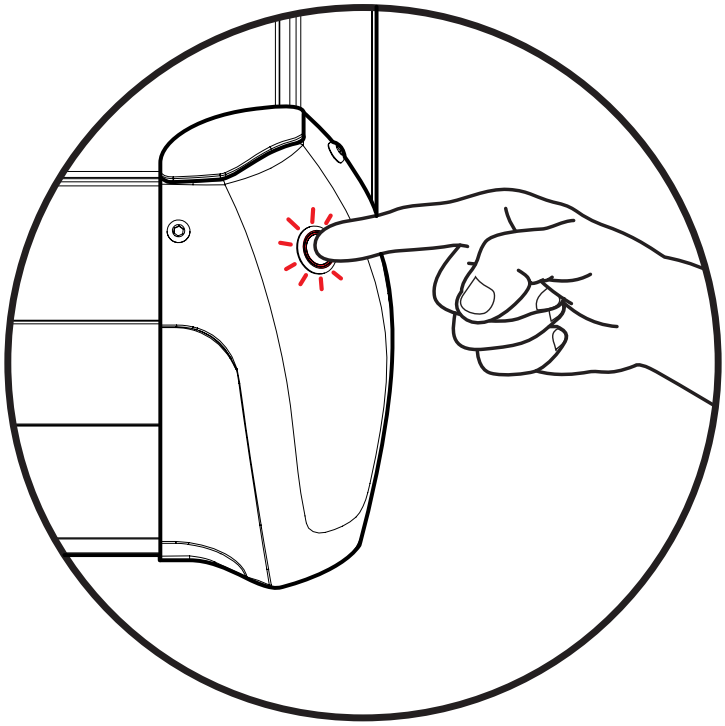

Action	Result
Upon Power Up	When the Emblaser 2 is turned on the laser is kept in a safe ‘disabled’ mode. This is indicated by the ‘enable’ button not lit.
Lid Closed + Enable	With the lid closed, the laser can be enabled by pressing the ‘Enable’ button. This is indicated by the ‘enable’ button being lit.
Lid Open when Enabled	The laser will immediately become ‘disabled’ when the lid is opened. This is indicated by the enable button light turning off.
Lid Open + Enable	The laser will not ‘enable’ if the lid is open.

It is recommended that you ‘enable’ the laser only when ready to cut or engrave.
It’s a good habit to ‘disable’ the laser at all other times.

Laser Height Control

The Emblaser 2 has the unique ability to set the height of the laser above the workpiece via software. There is no need to manually adjust the laser height when working with materials as the software sets this for you. Laser height control also allows you to control the laser height during multi-pass jobs, changing the laser height automatically during each pass.

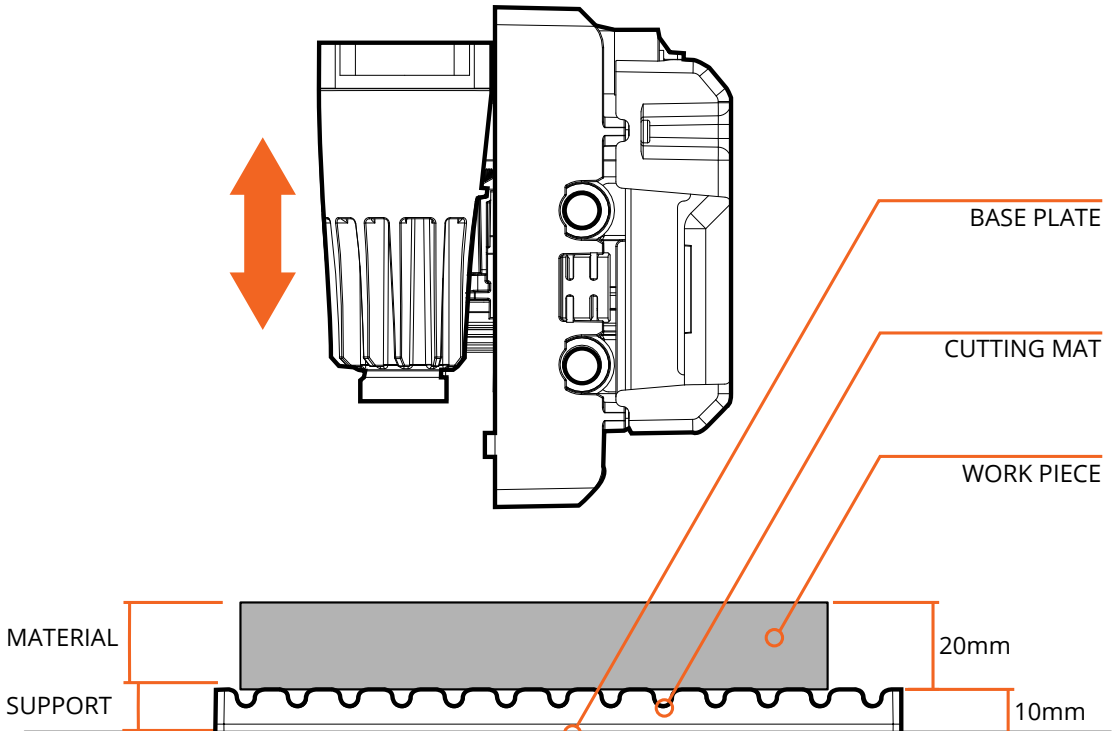

Knowing the thickness of your material and any support being used (e.g. the cutting mats) will allow LightBurn to automatically set the correct laser height.

These values are entered in cutting info menu of LightBurn, as shown below.

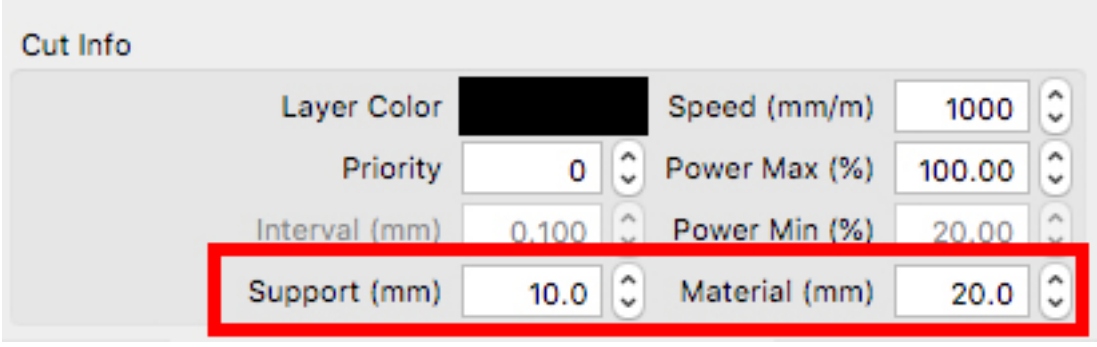

Using the Workspace Camera

Your Emblaser 2 is equipped with a workspace camera which allows you to easily align your material within the workspace.

IMPORTANT: The Workspace Camera requires your Emblaser to be connected via USB.

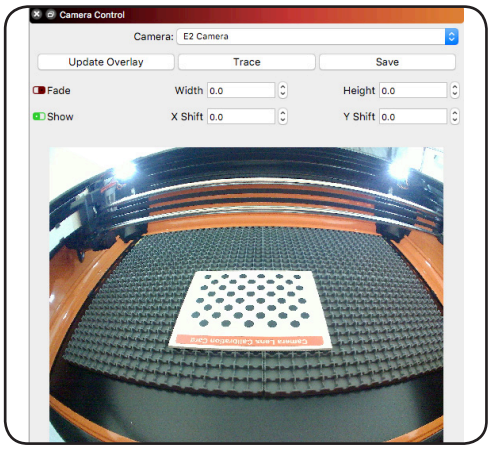

1. Camera Control Menu

In the 'Camera Control' menu, select the 'E2 Camera' from the camera pull down list.

Press the 'Update Overlay' button to display the workspace snapshot.

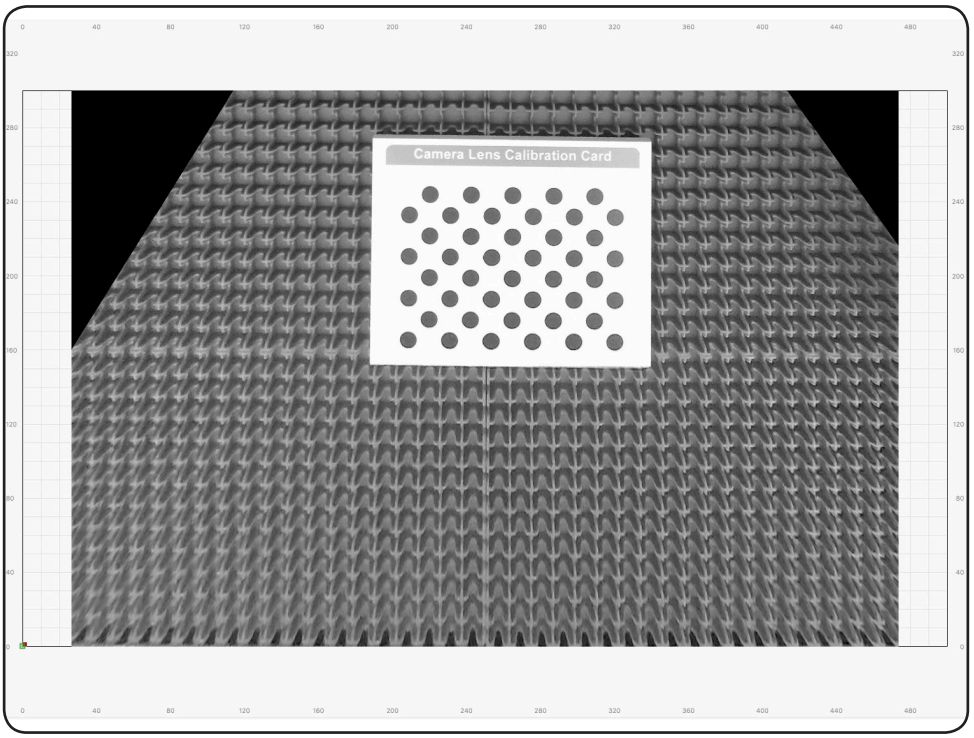

Workspace Camera Calibration

Emblaser 2 (Rev2.0) machines will have their camera per-calibrated. If you own an earlier machine, please check our Help Centre for the calibration process.

Connecting via WiFi

1. Join Emblaser 2 WiFi network

When first powered on, your Emblaser 2 will broadcast a Wifi network called 'Emblaser 2' or 'Emblaser 2+MAC address'.
Join this network.

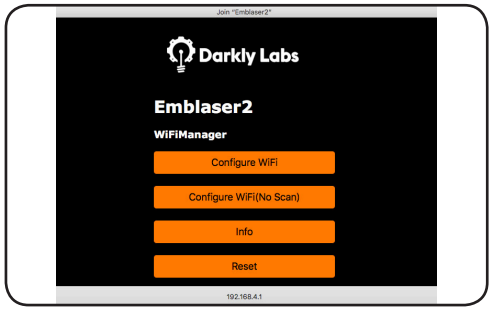

2. Enter WiFi network details

You will be presented with a screen allowing you to choose your local WiFi network and enter it's password. Once completed, your Emblaser 2 will connect to your local WiFi network when powered on. When connected, it will no longer broadcast it's own network.

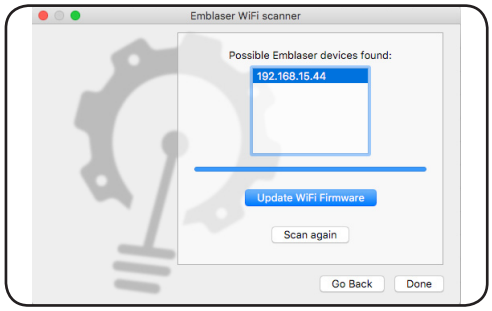

3. Find Emblaser 2 IP address

Within LightBurn, choose the 'Find / Update Emblaser 2 WiFi Devices' from the 'Emblaser 2' drop down menu.
This wizard will scan and find the IP address of your machine.
Make a note of this number.

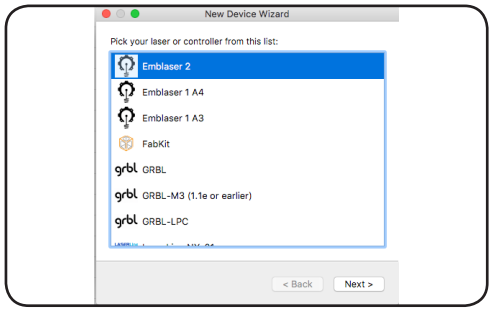

4. Create new device

Within LightBurn, create a new device, choosing 'Emblaser 2' from the wizard and 'Ethernet / TCP' when asked how you wish to connect.
Enter the IP address from Step 3 when prompted.
Give the new device a name such as 'Emblaser2-WiFi'

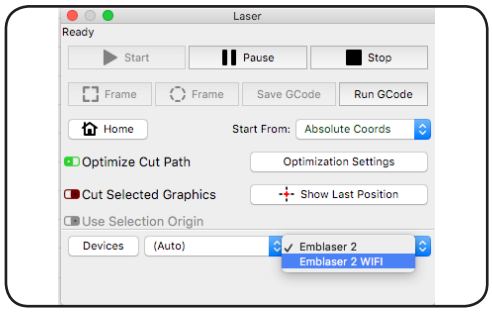

5. Select device and connect

With the new device created, select it from the device list.

Your machine should now be connected via WiFi.

5. CARING FOR YOUR EMBLASER 2

Maintainence Schedule

In order to keep your Emblaser 2 performing optimally, regular maintenance is required.

Weekly

- Clean the interior workspace & lid ..... (see page 23)
- Check and Clean the lens ..... (see page 23)

Monthly

- Wash the cutting mats. ..... (see Page 23)
- Check Fume Filtration System filters.....(see instructions)
- Check all fans for debris or unusual noise.....(see Help Centre)
- Check for any software or firmware updates.....(see Page 28).

Quarterly - Major Service Time

We highly recommend ordering an **Emblaser 2 Maintainence Kit** and performing the following tasks:

- Replace Exhaust, Laser Head and Laser PCB fans.....(see Help Centre)
- Clean interior workspace, cutting mats and lid.....(see page 23)
- Replace Air-Assist intake filter.....(see Help Centre)
- Lubricate the rails and bearings. ..... (see page 23)
- Replace Fume Filtration System filters.....(see instructions)
- Carefully check and clean focus lens.....(see Help Centre)
- Re-Run the **Optics Calibration Process**. ..... (see page 16)

Failure to regularly maintain your machine may lead to permanent damage.

General Maintenance

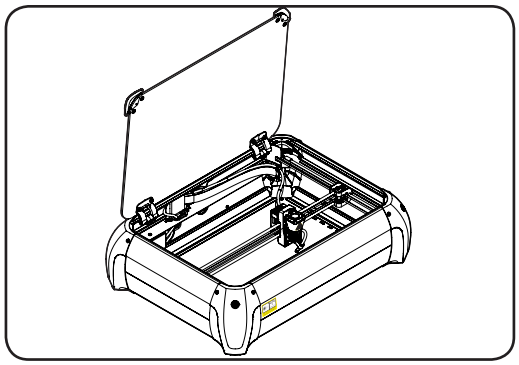

1. Workspace & Lid

Ensure you regularly clean debris and any residue build up within your workspace.

Use a soft lint-free cloth to clean your lid. Never use paper towel or abrasive materials on the lid as these will cause scratching.

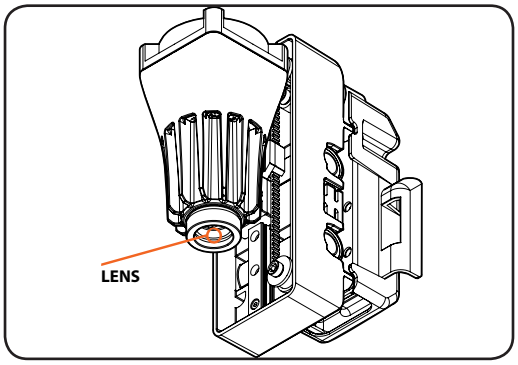

2. Lens

Keeping your lens clean will ensure you are getting the best performance from your Emblaser. The lens is a delicate component. Always use the recommended materials and process for cleaning.

Use the Lens Cleaning wizard in Lightburn to walk you through the process. This is found in the 'Emblaser 2' drop-down menu

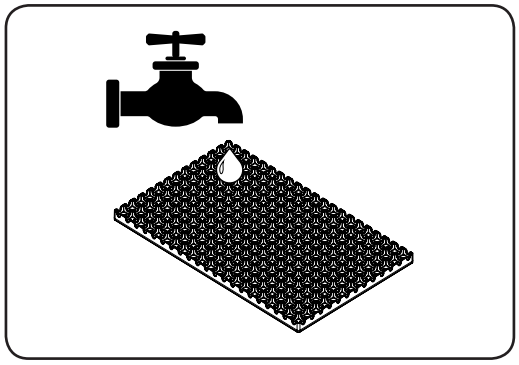

3. Cutting Mats

The Emblaser 2 cutting mats are made from a durable silicone compound. Over time they will become scorched and stained. They can be washed in mild soapy water. Make sure they are fully dry before reinstalling them.

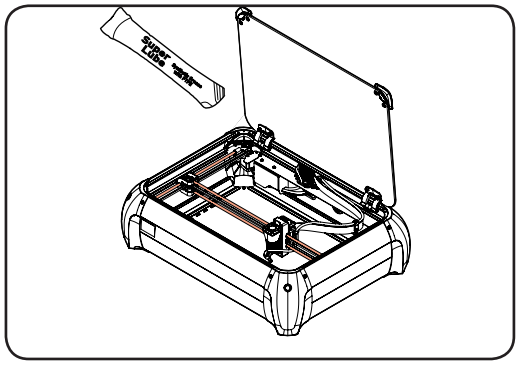

4. Rails & Bearings

The rails and bearings are mostly maintenance free. It's recommended that after every 30 hours of use, the rails are wiped with a lint free cloth and a small amount of the provided lubricant applied.

Replacing the Diode Module

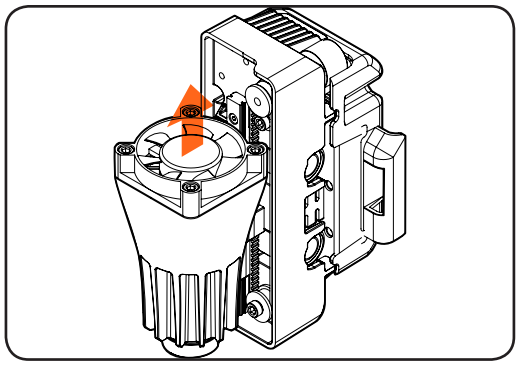

1. Jog the laser unit up

Before you begin any replacement steps, ensure the laser unit is at its highest position. Use the software to jog the laser unit to this position.

NEVER force the laser unit to move by hand.

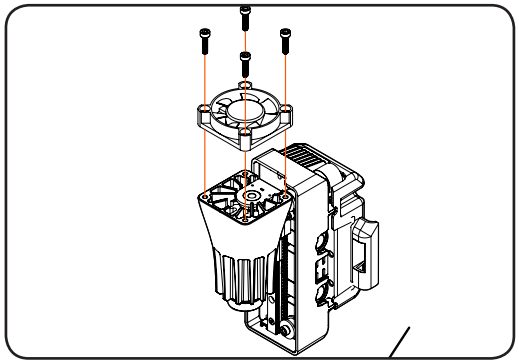

2. Remove fan

Use the provided hex wrench to remove the four (4) screws holding the fan in place.

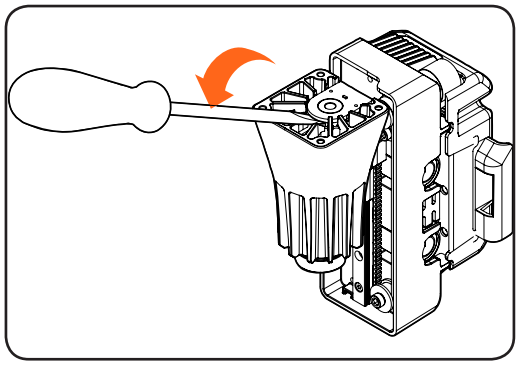

3. Remove old diode module

Place a flat-head screwdriver into the groove located under the diode module electronics PCB. Gently lever the diode module up and out of the heat-sink.
Avoid touching the paste and wash your hands thoroughly if it contacts your skin.

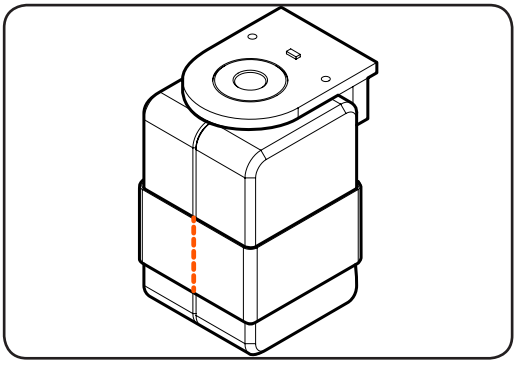

4. Prepare new diode module

The new Diode Module is supplied in a plastic casing. Carefully remove the tape holding the two sides of the casing together.

Replacing the Diode Module (cont.)

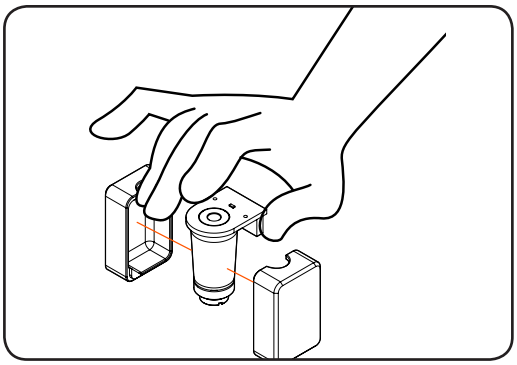

Holding the new Diode Module by the sides of the PCB, remove the casing.

NOTE: The new diode module is covered in thermal paste. Do not remove this. Wash your hands immediately if it comes in contact with your skin.

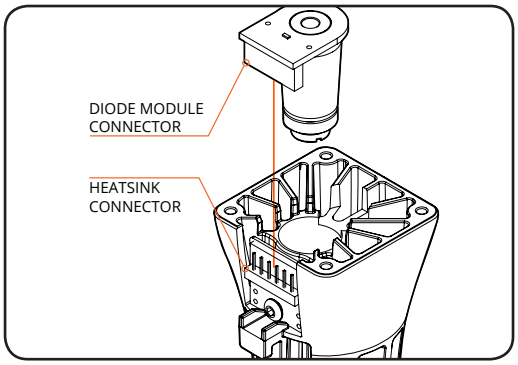

5. Insert new diode module

Carefully insert the new diode module into the heat-sink.

Press down gently to ensure the diode module connector correctly plugs into the heat-sink connector.

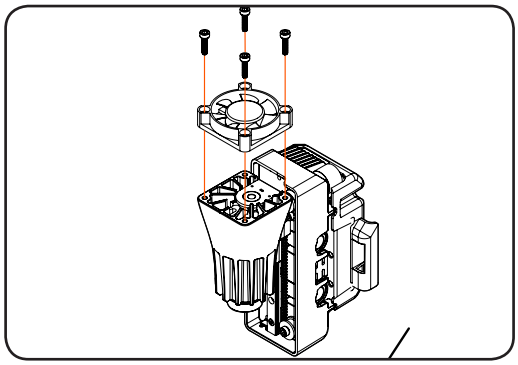

6. Re-install the fan

Use the provided hex wrench to fasten the four (4) screws holding the fan in place.

Updating Controller firmware

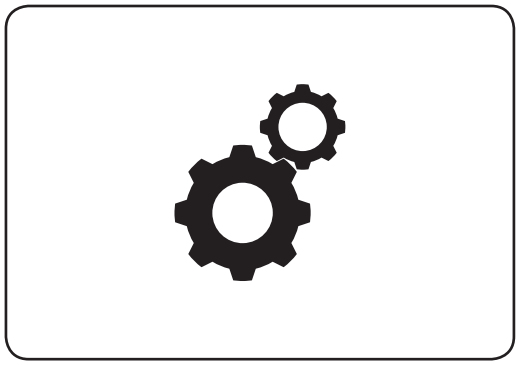

1. Download Controller firmware

Download the latest controller firmware from help center:
http://darklylabs.com/e2

Unzip the downloaded file to your desktop.

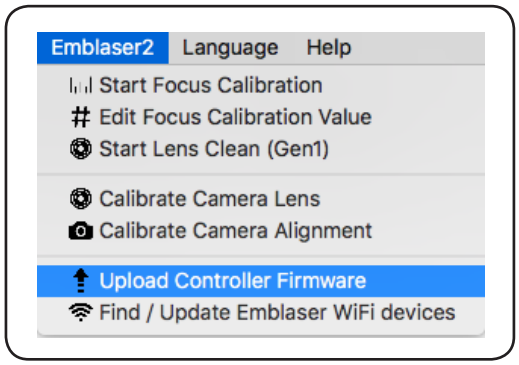

2. Run the firmware updater

Turn on your Emblaser 2 and run LightBurn.

From Lightburn, select the 'Emblaser2' menu along the top bar, then select 'Update Controller Firmware'.

Follow the instructions.

Updating the WiFi firmware

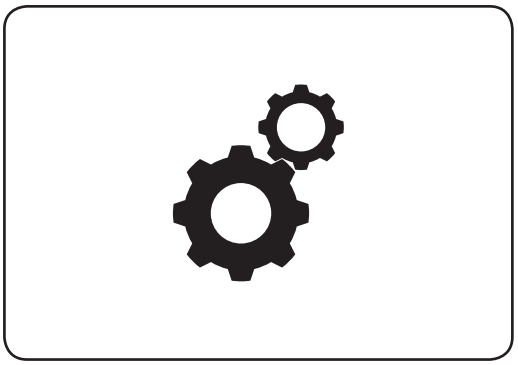

1. Download WiFi firmware

Download the latest firmware from the help center:
http://darklylabs.com/e2

Unzip the downloaded file to your desktop.

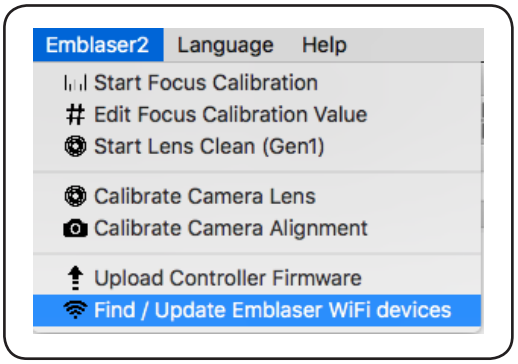

2. Run the firmware updater

Turn on your Emblaser 2 and run LightBurn.

From Lightburn, select the 'Emblaser2' menu along the top bar, then select 'Find / Update Emblaser WiFi Devices'.

Follow the instructions.

6. REFERENCE

Emblaser 2 Specifications

Mechanical

External Dimensions	• 540mm x 720mm x 200mm • 21.25” x 28.55” x 7.8”
Material Capacity	• 500mm x 300mm x 50mm • 19.68” x 11.81” x 1.97”
Shipping Box	• 780mm x 650mm x 260mm • 30.71” x 25.69” x 10.24”
Weight	• 12kg • 26.46 lbs
Shipping Weight	• 18kg • 39.88 lbs
Operating Temperature	• 15-32 C • 60-90 F

Electrical

AC Input	• 100-240V
Power Requirements	• 12VDC @ 7 amps
Connectivity	• USB • Wi-Fi 802.11 b/g/n

Optical

Machine Laser Class	• Class 1
Laser Diode Class	• Class 4
Wavelength	• 445-455nm
Max. average radiant power	• 5 Watts

Material Property Table

Polymer	Chemical Bonds	Breakdown Products	Effects
Polyolefins:			
Polyethylene	C-H	propane, propene, ethane, ethene, butene, hexene, and butene-1	Flammable
Polypropylene	C-H	pentane, pentene, heptene	Flammable
Polyacrylics:			
polyacrylonitrile (Sail cloths, ABS constituent)	N-H	ammonia, hydrogen cyanide, ketones	Potent airway irritants, toxic at high concentrations
Polyamide polymers:			
wool	O=C-N-H, S-S	carbon disulphide, carbon dioxide, hydrogen cyanide, benzene, toluene, and carbon monoxide	Toxic, irritant
polyurethane	N=C=O	nitrogen oxides, nitriles, isocyanate monomers, liquid polyols	Isocyanate pharyngitis, hypersensitivity and severe asthma in predisposed individuals
nylon	C–N, CO–CH2	Potential for water, carbon oxides, benzene, hydrogen cyanide (HCN), toluene, and benzonitrile, hydrogen and ammonia	Toxic, irritant
Polydienes and rubbers			
Polyisoprene (Synthetic rubber)	Isoprene, potentially other catalysts, crosslinking agents	Isoprene monomers, polymers, thermal cracking products, sulfides if vulcanised	Irritants, toxic
Polybutadiene (component of ABS)	butadiene	Butadiene monomers, cyclic compounds	toxic
Polychloroprene (Neoprene)	Chlorine	hydrogen chloride, polyene	Potent, acidic irritant of mucous membranes, corrosive, toxic

Material Property Table (cont.)

Polymer	Chemical Bonds	Breakdown Products	Effects
Synthetic carbon – oxygen chain polymers			
Polycarbonate (constituent of ABS)	O-CO2	carbon dioxide, bisphenol A, phenol	toxic
polyethylene tetraphthalate (PET)	C-O	acetaldehyde, carbon monoxide, carbon dioxide, compounds with acid and anhydride end groups	Irritant, toxic
Phenolic resins	methylene–benzene	carbon oxides, water, aromatic compounds, methane	Toxic, flammable
Epoxy resins	complex	Varied, mostly phenolic compounds	toxic
Cellulosics			
Wood, paper	Cellulose, lignin	tars	toxic
Halogenated polymers			
PVC	Chlorine	hydrogen chloride gas, polyaromatic hydrocarbons	Potent, acidic irritant of mucous membranes, corrosive, toxic
PTFE	Fluorine	hydrogen fluoride gas, hexafluoro-propene	Potent, acidic irritant of mucous membranes, corrosive, toxic
Related vinyl polymers			
polyvinyl bromide	Bromine	hydrogen bromide	Potent, acidic irritant of mucous membranes, corrosive, toxic
polyvinyl alcohol (PVA)		Water, thermal cracking products	potential irritants
polyvinyl acetate	Acetate	acetic acid	irritant
Styrenics			
Polystyrene (also a component of ABS)	Styrene	Styrene monomers, dimers, trimers, tetramers	Irritant, toxic

Table based on “Thermal Decomposition of Polymers - Craig L. Beyler and Marcelo M. Hirschler”

Health Warning Information

Color Blindness
The small percentage of the population (0.01%) that have blue-yellow colour blindness (tritanopia) may struggle to see the Emblaser 2 indicator lights and may not realise the laser system is 'enabled'. Tritanopic users must therefore be particularly careful.

Hypersensitivity
Isocyanate exposure from thermally degraded polyurethanes has the potential to cause hypersensitivity to develop over time in predisposed individuals, which can lead to subsequent life threatening asthma like reactions on re-exposure to even trace amounts.
Recommendations:
Those with a history of asthma should avoid laser cutting polyurethanes.
If a wheeze develops during or after cutting polyurethanes in any user, further polyurethane cutting should cease and medical advice should be sought.
Isocyanate by products from decomposition of polyurethanes can remain in exhaust ducting and can still cause sensitisation with skin contact.
If you get a sore throat or eyes while laser cutting polyurethanes, you have developed isocyanate pharyngitis and your precautions are not working effectively.

Airway Irritation
Many of the chemicals liberated by laser cutting and engraving have the potential to cause airway irritation, but few, if any, permanent effects. Some of the chemicals are known carcinogens, but with appropriate local or general exhaust ventilation, exposures are unlikely to add significantly to background environmental exposures (i.e. formaldehyde from MDF furniture, benzene in fuels).
If you are experiencing airway irritation, your ventilation is not adequate.

Exposure to fumes from laser cutting
The heating which occurs during laser cutting or engraving can cause charring, pyrolysis and even combustion of the material being worked on.
Exposure to the fumes and particulates released during laser engraving or cutting can cause irritation to the airways and potentially be extremely dangerous.
For example, exposure to Isocyanate from thermally degraded polyurethanes has the potential to cause hypersensitivity to develop over time in predisposed individuals, which can lead to subsequent life threatening asthma like reactions on re-exposure to even trace amounts.
Important: See Appendix for information on chemical reactions with various materials during laser cutting and engraving. Always research the material you plan to work with to ensure it is safe to do so.

Health Warning Information (cont.)

Always follow your local Occupational Health and Safety (OH&S) rules
Ensure that you comply with local occupational health and safety legislation. Failing to do so could put you in breach of the law. Even if not being used in a business, owners may be in breach of the law if injuries occur, since injury to a member of the general public could conceivably constitute a breach of the owner's OH&S obligation under law, subject to penalties. Visit your local government website for OH&S information on laser safety requirements. Those operating the Emblaser within an established business should nominate a designated laser safety officer, responsible for the safe use, training, and upkeep of the Emblaser and associated personal protective equipment, administrative controls such as user credentialing and safe operating procedures (SOPs), and engineering controls, such as ventilation

Fire
A laser cutter / engraver works by amplifying light to such a degree as to either melt or burn material while following a designated path. The heat generated during this process could potentially cause combustion (fire) within the material being worked on.
Ideally, a smoke / fire detector should be installed in the area the Emblaser 2 is being used. A fire blanket and smoke extinguisher should always be readily accessible.

Technical support

Servicing the Emblaser 2 and Accessories
The Emblaser 2 is designed to require minimal service. Please refer to the 'Caring for your Emblaser 2' section of this manual for maintenance information.
For any problems that arise not covered in this section, please contact your reseller.

Darkly Labs®

Unit 3, 99-101 Western Ave, Westmeadows, 3049 Australia

info@darklylabs.com ● www.darklylabs.com

Copyright © Darkly Digital Pty Ltd (Darkly Labs) 2014-2017.